DBC 1200

Pressure-Build Electro-Hydraulic Control Unit

Use and Application
Customer Technical Document

Specification # 18111832

TABLE OF CONTENTS

1 SCOPE 6

2 EHCU OVERVIEW 6

2.1 Features 6

2.2 Basic Operation 6
2.2.1 Antilock Braking (ABS) 6
2.2.2 Dynamic Rear Proportioning (DRP) 7
2.2.3 Corner Braking Distribution (CBD) 7
2.2.4 Traction Control (TCS) 7
2.2.5 Electronic Stability Control (ESC) 7

2.3 Content 7
2.3.1 Physical Content Overview 7
2.3.2 Functional Content Overview 7
2.3.3 Standard Content 8
2.3.4 Optional Content 8
2.3.4.1 Optional Physical Content 8
2.3.4.2 Optional Functional Content 9

2.4 Appearance 9

2.5 Labeling 9

3 EHCU INSTALLATION REQUIREMENTS 9

3.1 Mounting Interfaces 9

3.2 Mounting Location Considerations w/ integral inertial sensor 10

3.3 Brake System Diagram 10

3.4 Hydraulic Split 10

3.5 Hydraulic Connections 10

3.6 Hydraulic Schematics 10
3.6.1 Diagonal Split Hydraulic Schematic 11
3.6.2 Front-Rear Split Hydraulic Schematic 12

3.7 Base Brake Interfaces 12

3.8 Torque-to-Seal / Fail 12

3.9 Hydraulic Requirements 12
3.9.1 Burst and Proof Pressure 12
3.9.2 Maximum Operating Pressures 13
3.9.3 Brake Fluid Displacement / MC Sizing 13
3.9.4 Hydraulic Leakage 13

DO NOT DISTRIBUTE OR COPY WITHOUT BWI GROUP APPROVAL

3.10 Electrical Interfaces **13**
3.10.1 Wheel Speed Sensor Inputs 13
3.10.2 External Switch Inputs 13
3.10.3 Discrete Outputs 13
3.10.4 Serial Communication 14
3.10.5 Electrical Connector 14

4 EHCU APPLICATION & USE CONSIDERATIONS **14**

4.1 Debris & Contaminant Sensitivity **14**

4.2 Brake System Considerations **14**

4.3 Suspension / Steering Considerations **14**

4.4 Tire Considerations **14**
4.4.1 Spare Tire 14
4.4.2 Replacement Tires 14

4.5 Drivetrain Considerations **15**

4.6 Wiring Considerations **15**

5 VEHICLE ASSEMBLY PLANT CONSIDERATIONS **15**

5.1 EHCU Processing Overview **15**

5.2 Brake Fluid Considerations **15**

5.3 Brake System Leak Testing **15**

5.4 Evacuation, Fluid Fill and EHCU Electrical Hookup Process **15**
5.4.1 General Process Recommendations for Evacuation and Fluid Fill 15
5.4.2 Recommended Evacuate & Fluid Fill Process Flow 16
5.4.3 Optional Evacuate & Fluid Fill Process Flow 18
5.4.4 Improper Evacuate & Fill Processing 19

5.5 EOL Testing / Vehicle Assembly Verification **19**
5.5.1 EOL Facility Recommendations 20
5.5.2 EOL Test Flow 20
5.5.3 Start of EOL Test 20
5.5.4 Verify EHCU ID 20
5.5.5 Clear Diagnostic Trouble Codes (DTCs) 21
5.5.6 Verify Brake Switch Input 21
5.5.7 Verify Wheel Sensor Input while at Rest 21
5.5.8 Verify Operation of Warning Lamps 21
5.5.9 End of Static Test 21
5.5.10 Start of Dynamic Test 22
5.5.11 Verify Wheel Speed Sensor Input 22
5.5.12 Verify Operation of the Base Brake System 22
5.5.13 Verify & Correlate Operation of Solenoid, Brake Pipe Routing and Wheel Sensor Wiring 22
5.5.14 Perform Vacuum Relief Profile 23
5.5.15 Verify DTC Status 23
5.5.16 End of Test 23

5.6 Alternate EOL Process **23**

DO NOT DISTRIBUTE OR COPY WITHOUT BWI GROUP APPROVAL

5.6.1 Single-Axle EOL Assumptions 23
5.6.2 Alternate EOL Process Flow 24

5.7 Repair Bleed Process 24

5.8 Assembly Adjustment / Tuning 24

5.9 Shelf Life 24

6 EHCU SERVICE AND REPAIR 24

7 EHCU ENVIRONMENTAL CAPABILITIES 24

7.1 Temperature and Humidity 24
7.1.1 Operating 24
7.1.2 Shipping 25

7.2 Thermal Shock 25

7.3 Atmospheric Pressure 25

7.4 High Pressure Spray 25

7.5 Corrosion 25

7.6 Chemical Resistance 25

7.7 Vibration 25

7.8 Impact/Drop 25

7.9 Shipping & Handling 25

7.10 Electrical Environment Compatibility 25

8 EHCU PERFORMANCE 25

8.1 Minimum Release Pressure 25

8.2 Leakage 25

8.3 Operating Voltage 26

8.4 Operating Pressure – Nominal Voltage Condition 26

8.5 Operating Pressure – Low Voltage Condition 26

8.6 Pump Flow 26

9 ABS SYSTEM FAILURE 26

9.1 DFMEA Process 26

9.2 EHCU Failure 26

DO NOT DISTRIBUTE OR COPY WITHOUT BWI GROUP APPROVAL

9.3 Self Diagnostics 26

9.4 Failsafe Design 27

9.5 Partial System Shut Down 27

9.6 Circuit Protection 27

9.7 Control During Failure Modes 27

10 VALIDATION / VERIFICATION 27

10.1 Laboratory Validation Plan 27

10.2 Vehicle Performance Verification 28

11 APPLICABLE DOCUMENTS 28

11.1 Order of Precedence 28

11.2 BWI Group Documents 28

12 REFERENCES 28

12.1 Industry Documents 28

12.2 Acronyms, Abbreviations and Symbols 29

13 RECORD OF CHANGES 31

DO NOT DISTRIBUTE OR COPY WITHOUT BWI GROUP APPROVAL

1 Scope

This document covers requirements for the DBC 1200 PB EHCU imposed at the component, subsystem, and vehicle level to ensure interface compatibility and a resulting acceptable System performance.

2 EHCU Overview

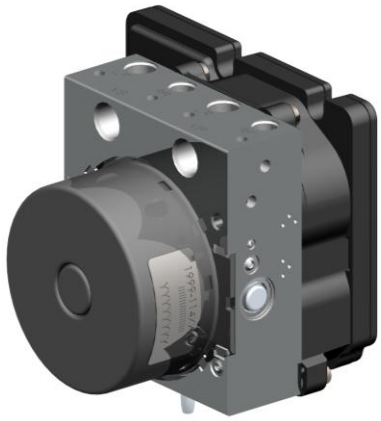

2.1 Features

- 12 valve, 4 channel hydraulic assembly
- Diagonal or Front-Rear Hydraulic Split
- Mass: 1.9 kg EHCU
- Dimensions: 126 mm x 100 mm x 106 mm (L x H x W)
- Hydraulic Connections – ISO 4038/SAE J1290 flare configuration standard, JASO F402 90 degree optional
- 200 bar, -40 to 125 C, 9.5-16V operating range
- Serviceable ECU w/ USCAR Connector
- Active Wheel Speed Interface
- Optional Output Signals (examples: vehicle speed, rough road, and odometer pulse counter)
- CAN IVC Communications
- ISO 14229 / 14230 Diagnostics capable

2.2 Basic Operation

2.2.1 Antilock Braking (ABS)

When a calibrated amount of tire slip is sensed during a brake application, the EHCU will enter the antilock mode. During antilock braking, the hydraulic pressure in the individual brake circuits is controlled in order to prevent any tire from slipping excessively. A separate hydraulic line and specific valves are provided for each brake or a separate hydraulic line and specific valves are provided for each front brake and one for the two rear brakes. The EHCU can decrease, hold, or increase the hydraulic pressure to each wheel brake. However the EHCU cannot increase the hydraulic pressure at the wheel brakes above the amount that the master cylinder transmits during braking. During antilock braking, a series of rapid pulses will be felt in the brake pedal. The rapid change in the position of the individual valves as they respond to the desired wheel speed causes the pulsation. This pedal pulsation is present during antilock braking and will stop when normal braking is resumed or when the vehicle comes to a complete stop. Ticking, popping, or buzzing noise may also be heard as the solenoid valves rapidly cycle and as the EH pump is pumping fluid back to the master cylinder. During antilock braking on dry pavement, the tires may make intermittent chirping noises as they are slipping. These noises and pedal pulsation are normal during antilock operation. Brake pedal operation during normal

DO NOT DISTRIBUTE OR COPY WITHOUT BWI GROUP APPROVAL

braking should be no different than systems without ABS. Maintaining a constant force on the pedal provides optimized stopping distance while maintaining vehicle steerability and stability.

2.2.2 Dynamic Rear Proportioning (DRP)

DRP is a pressure proportioning system that uses wheel speed inputs. In a normal braking condition, equal wheel speed should be maintained between front and rear tires for efficient and balanced braking. In a hard braking condition, a vehicle requires relatively less brake force at rear wheel due to vehicle's weight transfer to the front. DRP maintains desired brake pressure to the rear brakes by using the ABS rear apply (hold) and release valve(s) if necessary, in order to provide efficient braking and vehicle stability.

2.2.3 Corner Braking Distribution (CBD)

CBD is a pressure control system that utilizes wheel speed input and independent control of the rear brake pressures during DRP mode to further enhance the stability of the vehicle during combined cornering and DRP maneuvers.

2.2.4 Traction Control (TCS)

TCS uses brakes and engine torque control to provide optimum tractive force on drive wheels during acceleration.

2.2.5 Electronic Stability Control (ESC)

ESC enhances vehicle stability and directional control in an oversteer or an understeer condition while coasting, accelerating or braking.

2.3 Content

The physical and functional content of the EHCU is defined in the following paragraphs.

2.3.1 Physical Content Overview

The EHCU includes a pre-assembled Hydraulic Control Unit (HCU) and Electronic Control Unit (ECU) that are separable and can be independently serviced. Provisions are included for attachment of a vehicle mounting bracket at three discrete points on the EHCU. Reference the Customer EHCU outline drawing for additional details.

The major components of the EHCU include an electronic control unit (ECU) consisting of a microprocessor with failsafe circuitry, memory in which the application-specific software and calibration settings reside, various signal interface & power control circuitry, solenoid coils, inertial sensor, an electrical connector; and a hydraulic control unit (HCU) comprised of an aluminum body housing, pump inlet accumulators for each hydraulic circuit, motor-driven positive-displacement pumps, pressure sensor(s), and various normally-open and normally-closed solenoid valves.

2.3.2 Functional Content Overview

The EHCU incorporates brake pressure modulation and pressure build capabilities into the vehicle base brake system. DRP, TCS, and ESC capability is included in all configurations, which can eliminate the need for physical hydraulic proportioning valves. Other functions may be enabled through the addition of vehicle system (controller) software and/or interfaces and peripheral sensors in consideration of the I/O and memory capacity of the EHCU assembly.

The EHCU, when de-energized, or when operating in standby mode (not in a controlled braking event), works as a distribution path for brake fluid through each of the hydraulic brake pipes on the vehicle from the master cylinder to the wheel brakes and from the wheel brakes to the master cylinder. The EHCU, during controlled brake events, controls the flow of brake fluid to and from each of the wheel brakes and the master cylinder. The EHCU uses I/O through the vehicle wiring harness to perform the control decisions and control functions for the solenoid-actuated valves and the EH pump. The EHCU includes diagnostic failsafe strategies to provide a return to a minimum of full base brake system functionality under all diagnosed failure conditions. The EHCU is optionally configured for diagonal or front/rear split brake systems.

DO NOT DISTRIBUTE OR COPY WITHOUT BWI GROUP APPROVAL

2.3.3 Standard Content

- **Brake Fluid Distribution Block:** The EHCU serves as a hydraulic manifold to facilitate brake fluid containment and distribution from the master cylinder to and from the foundation brakes.
- **Anti-Lock Braking System (ABS):** 4-channel wheel acceleration / slip / jerk control system for use with diagonal or front/rear split hydraulic brake systems. The 4-channel system typically uses four wheel speed sensor inputs, but can also be implemented with three wheel speed sensors if on a RWD vehicle. A 4-channel, 3-wheel speed sensor system will control both rear wheels the same, based on the single rear wheel speed sensor. A 4-channel, 4-wheel speed sensor system may be implemented with independent rear brake control or with “select-low” rear control where both rear wheels are controlled based on the tire with the most slip. Whether independent control or “select-low” control is chosen is dependent on rear suspension sensitivity to out-of-phase rear brake control.
- **Dynamic Rear Proportioning (DRP):** Maintains rear wheel slip to a level below front wheel slip for optimization of brake balance prior to ABS entrance
- **Corner Braking Distribution (CBD):** Individual rear wheel control to improve vehicle stability during combined cornering and DRP maneuvers. Only available for systems with 4 wheel speed sensors.
- **Traction Control System (TCS):** Individual driven wheel control using independent brake pressure application and powertrain control to limit wheelspin in order to maximize tractive effort / acceleration capability and maintain steerability.
- **Electronic Stability Control (ESC):** Vehicle yaw and side slip control system that uses independent brake and powertrain control to keep the vehicle as close to its intended path as possible, as dictated by sensor inputs from steering angle, vehicle yaw, vehicle lateral acceleration, and a master cylinder pressure sensor.
- **Initialization / Self-Test:** The ECU will execute an initialization self-test at the beginning of each drive cycle. If a functional fault is detected, the ECU will set an applicable Diagnostic Trouble Code (DTC). The initialization sequence may be audible depending upon ambient noise conditions and the physical mounting method and location of the EHCU on the vehicle structure.
- **On-Board Diagnostics (OBD):** Internal diagnosis, storing, and reporting of electrical and hydraulic faults that could compromise EHCU functionality. ISO 14230 (over CAN or K-line) or ISO 14229 (CAN only) protocols are available for communication to service tools.
- **Vehicle Communication System:** Protocol to match vehicle architecture to communicate with other controllers or displays. CAN is available for intra-vehicle communication.
- **Brake Switch or Brake Apply Sensor Input:** Indication to the EHCU of brake pedal input by the driver. Can be implemented as a physical or serial interface for a brake switch, and as a serial interface for a Brake Apply Sensor. Power supply for a Brake Apply Sensor is not available from the EHCU.
- **Device Control:** Through use of a serial data diagnostic (scan/service) tool, individual solenoid valves and/or the pump motor may be commanded on or off.

2.3.4 Optional Content

The following will be optional content for the EHCU as determined by each customer’s production requirements and documented in the applicable production contract and application-specific ABS Electrical Mechanization. All optional content listed below may not be available in the same EHCU due to physical interface limitations.

2.3.4.1 Optional Physical Content

Refer to the application-specific ABS Electrical Mechanization for implemented content.

- **Front Wheel Brake Pressure Sensors:** Physical sensors to measure brake pressure for use with optional functional content.
- **Discrete Inputs:** Physical interfaces for use with optional functional content.
- **Discrete Outputs:** Physical interfaces for use with optional functional content.
- **PWM Output:** For communication of Rough Road or other information.
- **Switch Inputs:** Switch inputs for use with Brake Fluid Level, 4WD switch, or other switches.

DO NOT DISTRIBUTE OR COPY WITHOUT BWI GROUP APPROVAL

2.3.4.2 Optional Functional Content

Refer to the production contract and application-specific ABS Electrical Mechanization for implemented content.

- **Panic Brake Assist (PBA):** The PBA function provides additional brake pressure over the pressure provided by the conventional brake apply system during panic brake.
- **Hill Launch Assist (HLA):** The HLA provides a delayed brake release to reduce or eliminate vehicle rollback on an uphill launch.
- **Vehicle Speed Output:** For usage by cluster (speedometer) or other controllers. Implemented with a serial or physical interface.
- **Rough Road Detection:** Analysis of wheel speed signals to determine when vehicle is on a rough road, and the relative magnitude of roughness. For usage by Powertrain, Suspension, or other controllers. Implemented with a serial or physical interface.
- **Wheel Speed Output:** Output(s) for use by other vehicle systems. Implemented through a serial interface for individual outputs or a physical interface for up to two outputs (one per diagonal).

Note: The vehicle speed, wheel speed, and rough road outputs are not diagnosable signals, other than typical wheel speed sensor hardware and wheel speed sensor wiring failure detection. The accuracy of the speed signals is +/-4% from the actual steady state speed when the OEM tires are installed on the vehicle. It is expected that the receiving module will monitor for wiring-related failure modes between the EHCU and the module receiving the signal(s), and that signal supervision will be utilized by the receiving module for a serial interface.

2.4 Appearance

All exposed surfaces of the EHCU will be black, gray, silver, or white.

2.5 Labeling

The EHCU label area available for customer-specified information is 55mm x 23mm. The EHCU label will be located on the back face of the ECU, as shown in the Customer EHCU outline drawing, and will consist of black ink onto a white, matte-finish polyester film. The label may include both human readable (2 mm max) and 1 or 2-D bar-code information. The desired customer label data density (amount and size of requested information) may affect print quality and automated scanner readability.

3 EHCU Installation Requirements

The following subsections define the interfaces required to properly install the EHCU into a vehicle. These include mechanical, hydraulic, and electrical interfaces to other components and the vehicle environment.

3.1 Mounting Interfaces

Refer to the separately-provided Customer EHCU outline drawing for mounting interface details.

It is the customer's responsibility to design, procure, and assemble the vehicle mounting bracket for the EHCU. The BWI Group three-point isolation mount design shall be employed for attaching the EHCU to the vehicle mounting bracket. The EHCU mounting pin will be provided, already installed on the EHCU assembly, but it is the customer's responsibility to procure and assemble the mounting provisions, which consist of grommets, sleeves, and bolts. Existing BWI Group designs shall be utilized for the mounting provisions.

Existing BWI Group part numbers for the mounting provisions are:

Description	Part Number/Rev Level	Number Required
Main Mounting Grommets	18044286/04	2
Pin Grommet	18113480/01	1
Sleeves	18047767/03	4
Bolts	18047768/03	2

DO NOT DISTRIBUTE OR COPY WITHOUT BWI GROUP APPROVAL

3.2 Mounting Location Considerations w/ integral inertial sensor

- The EHCU's outlet brake pipe mounting face shall be facing horizontal and upward with an allowable angle of +2 / -2 degrees from vertical with the vehicle at normal ride height (two passengers loading).
- The EHCU assembly as-installed in vehicle shall have a natural frequency greater than 40 Hz. A higher natural frequency / stiffness for the bracket (and the structure it mounts to in the vehicle) is better.
- The vehicle mounting bracket for the EHCU shall have a material thickness of 2.5 mm.
- The EHCU should be mounted such that the inlet ports are mounted below the height of the master cylinder outlet ports for improved bleedability.
- The vehicle mounting bracket for the EHCU should be attached to a rigid structure, but should not be attached to the front-of-dash for improved noise isolation.
- Hydraulic noise can be reduced by using shorter brake pipes between the master cylinder and EHCU.
- Preferred EHCU mounting location is away from direct heat sources (i.e. Exhaust system).
- Preferred EHCU mounting location is away from areas of direct splash / road debris from tires.
- Additional clearance beyond the EHCU is required for installation and removal of the electrical connector. Refer to the Customer EHCU outline drawing for the clearances required.
- Additional clearance beyond the EHCU is required to remove the ECU from the HCU. Refer to the Customer EHCU outline drawing for the clearances required.

3.3 Brake System Diagram

The following diagram shows the location of the EHCU within the brake system.

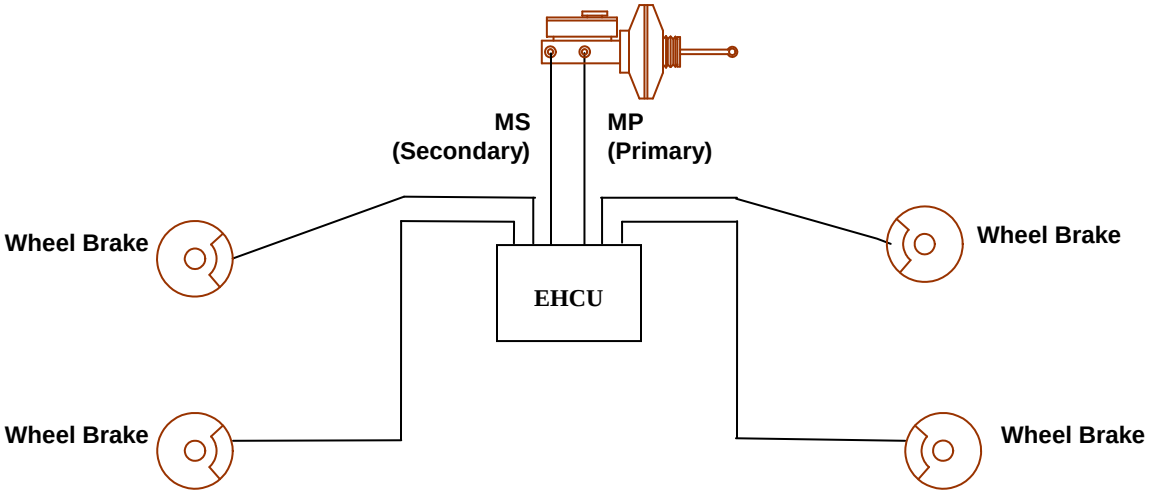

3.4 Hydraulic Split

The EHCU preserves the integrity of the Base Brake hydraulic configuration.

3.5 Hydraulic Connections

The EHCU connects to the master cylinder and the wheel brakes, via brake pipes, with tube ports as defined per the Customer EHCU outline drawing. Ports compatible with ISO 4038 and SAE J1290 simple flare are standard. Ports compatible with JASO F402 90 degree and SAE J533 45 degree inverted flare are available. Refer to the Customer EHCU outline drawing and the ISO, SAE, or JASO standards, as applicable, referenced in 12.1 *Industry Documents* for additional information.

3.6 Hydraulic Schematics

The general hydraulic configurations are represented in the hydraulic schematics that follow:

DO NOT DISTRIBUTE OR COPY WITHOUT BWI GROUP APPROVAL

3.6.1 Diagonal Split Hydraulic Schematic

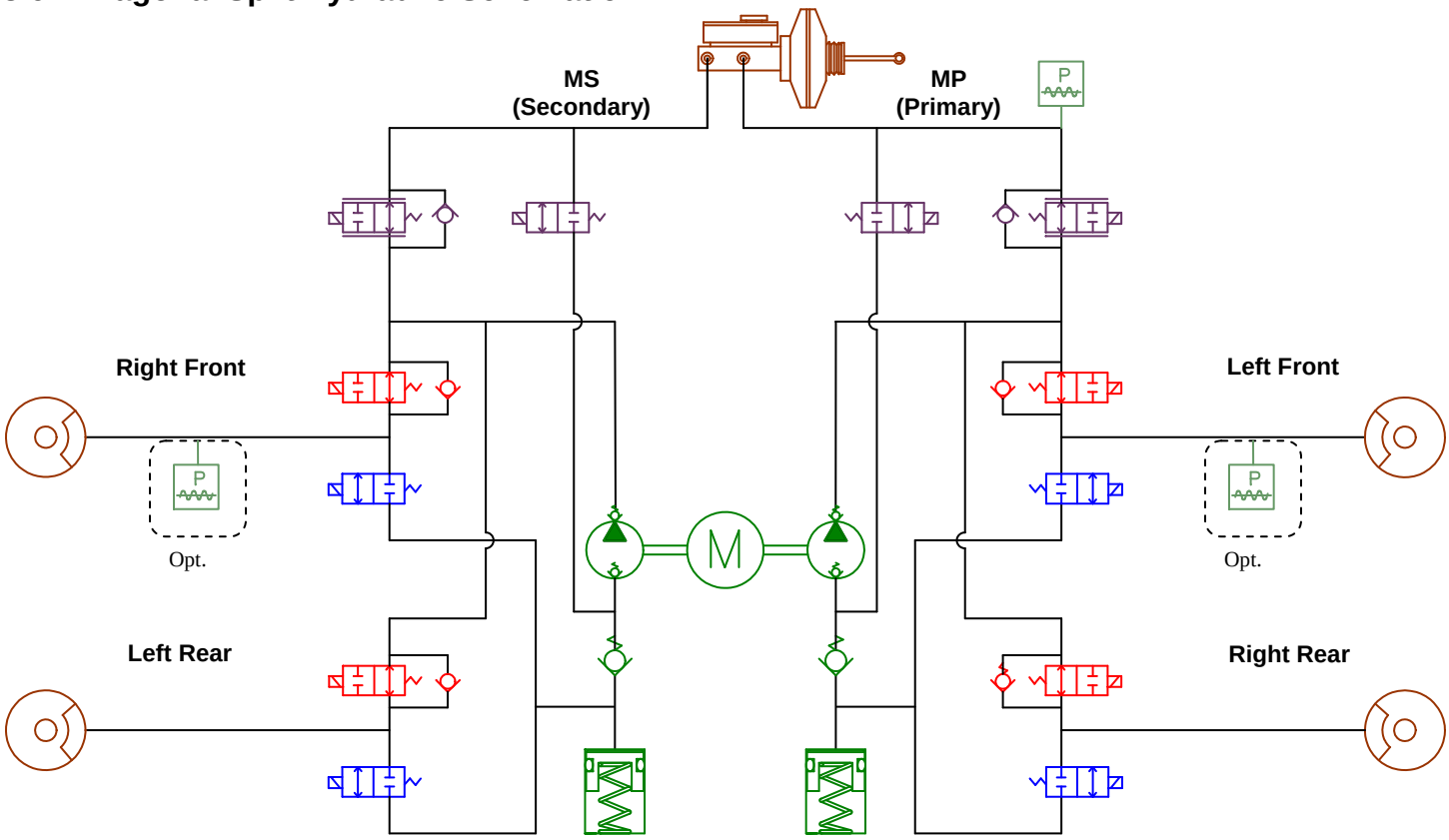

3.6.2 Front-Rear Split Hydraulic Schematic

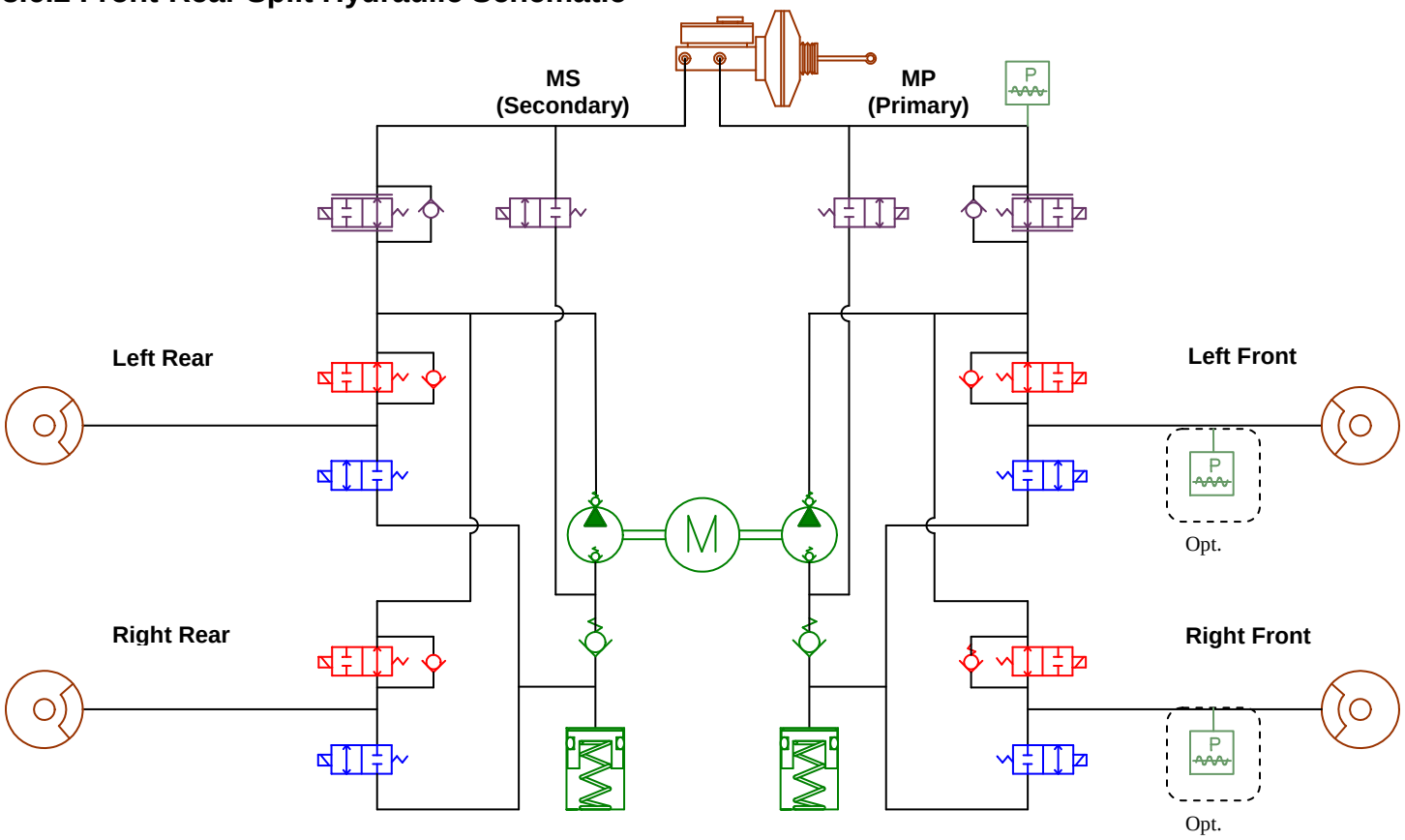

3.7 Base Brake Interfaces

The EHCU will interface with the following base brake components:

- Master Cylinder
- Front Caliper
- Rear Drum Assembly, or Caliper
- Brake Pipes and Hoses

Note that DRP only functions dynamically (when the vehicle is moving and DRP entrance criteria are met). The rear brakes will be exposed to full master cylinder pressure whenever ABS or DRP are not active, and a proportioning valve is not present.

The base brake components referenced above shall be capable of meeting and withstanding the interface requirements of section 3.9 *Hydraulic Requirements.*

3.8 Torque-to-Seal / Fail

All HCU threaded connector ports should be evaluated by the customer with the actual brake pipes / fittings and production torque processing equipment for torque-to-seal characteristics intended to prevent air entry into the base brake system during normal plant processing through evacuate and fill. The maximum tube nut assembly torque(s) shall not exceed the minimum observed failure torque(s). The minimum torque-to-fail (TTF) shall be at least 150% of the maximum torque-to-seal (TTS). Recommended torque values are referenced on the Customer EHCU outline drawing.

3.9 Hydraulic Requirements

3.9.1 Burst and Proof Pressure

- Burst pressure for components exposed to master cylinder pressure 350 bar

DO NOT DISTRIBUTE OR COPY WITHOUT BWI GROUP APPROVAL

- Proof pressure for components exposed to the EHCU's secondary circuit 190 bar

3.9.2 Maximum Operating Pressures

- Maximum operating pressure 200 bar
- Maximum pressure peaks, during pump operation, on the master cylinder connections 275 bar
- Maximum pressure differential between the master cylinder connections and the wheel brake connections 200 bar
- Maximum peak pressure differential, during pump operation, between the master cylinder connections and the wheel brake connections 275 bar

3.9.3 Brake Fluid Displacement / MC Sizing

The brake fluid displacement of the primary circuit of the EHCU is less than 0.38 cc @ 100 bar during base brake operation. During ABS operation the EHCU will temporarily store up to 3.0cc of fluid (4.0cc or 5.5cc on the optional / larger accumulator) released from the wheel brakes on each hydraulic split during the release cycle. There needs to be enough additional fluid displacement / stroke remaining from the master cylinder, booster, and brake pedal after this release process for the wheel brakes on each hydraulic split to reapply enough pressure to lock the wheel(s) at GVM on a hi-coefficient dry asphalt or dry concrete surface.

3.9.4 Hydraulic Leakage

The vehicle should be designed such that braking capability will meet the single channel failure requirements of any applicable Government Brake Regulation in the event of brake fluid leakage internal or external to the EHCU.

3.10 Electrical Interfaces

Refer to the separately-provided Electrical Interface CTD and application-specific ABS Electrical Mechanization specified in 11.2 *BWI Group Documents* for additional information.

3.10.1 Wheel Speed Sensor Inputs

The EHCU includes a maximum of four wheel speed sensor inputs. Active (hall effect or MR) sensors are supported. The standard two wire bi-state current (7 & 14 mA) interface for active sensors is supported. Refer to the Electrical Interface CTD specified in 11.2 *BWI Group Documents* for additional information.

3.10.2 External Switch Inputs

The EHCU may include up to four external switch inputs. Two of the switch inputs support open circuit detection which is dependant on the external switch circuit configuration. These switch inputs may be used for several different functions as required by the specific application. The following is a list of some of those functions.

- Brake Pedal Switch
- 4WD Active Switch
- Low Brake Fluid Switch
- Park Brake Switch
- TCS Switch

3.10.3 Discrete Outputs

Up to four outputs can be optionally configured, two low side drive PWM outputs and an additional two low side drive or high side drive outputs. These outputs support a variety of system functions.

- ON/OFF load control
- ABS Warning Lamp
- Red Brake Warning Lamp
- One - Low Frequency Pulse Width Modulation (communication with other systems)
- Two - Buffered Wheel Speed

DO NOT DISTRIBUTE OR COPY WITHOUT BWI GROUP APPROVAL

- One - Vehicle Speed Output

3.10.4 Serial Communication

The EHCU supports both K-line (ISO 14230-1) and CAN (ISO 11898) serial communication busses for diagnostic services. Intra-vehicle communication is supported via the CAN bus. It is recommended that signal supervision be utilized for all critical EHCU input / output signals.

3.10.5 Electrical Connector

The EHCU uses a single, USCAR-compliant harness connector for all signal and power interfaces. The harness connector uses a mechanical assist feature to reduce insertion force. Connector pin-out details (electrical signal assignments) are outlined in the Customer EHCU outline drawing and application-specific ABS Electrical Mechanization. Refer to the USCAR documents specified in 11.3 *Industry Documents* for additional information.

4 EHCU Application & Use Considerations

4.1 Debris & Contaminant Sensitivity

The DBC 1200 EHCU and similar controlled brake assemblies are extremely sensitive to debris and foreign contaminants. While the control orifices located in the solenoid valving and other internal structures are protected from small particulate debris, caution should be exercised during storage and handling to ensure that the inlet and outlet ports of the hydraulic assembly remain covered. Care should be demonstrated to limit exposure to potential debris or contaminant entry into the brake system during assembly.

4.2 Brake System Considerations

The EHCU is designed (valve orifices, accumulator volumes, and EH pump flow) to work with the brake system sizing and its resultant pressure cycling band and cycling frequency as calibrated on the customer-provided development vehicle(s). Changes in the brake system such as caliper size or type, lining material / compressibility / output, rotor geometry, wheel cylinder size, or drum geometry may have an adverse impact on ABS system performance. Any brake system changes should be reviewed with BWI Group Engineering. Development vehicles used for final calibrations must be representative of the production brake system.

4.3 Suspension / Steering Considerations

The EHCU is calibrated on the customer-provided development vehicle(s). Changes in the suspension and steering geometry / kinematics, compliances, or tuning may have an adverse impact on controlled brake system performance. Any suspension or steering changes should be reviewed with BWI Group Engineering. Development vehicles used for final calibrations must be representative of the production suspension and steering systems.

4.4 Tire Considerations

The EHCU is calibrated on the customer-provided development vehicle(s). Changes in the tire design, construction, or tread pattern may have an adverse impact on controlled brake system performance. Any tire changes (including the spare tire, if applicable) should be reviewed with BWI Group Engineering. Development vehicles used for final calibrations must be representative of the production tires.

4.4.1 Spare Tire

Using the compact spare supplied with the vehicle will not affect the operation of ABS system. The ECU software can compensate for this smaller tire. Increased stopping distances may occur due to reduced stopping capability of a compact spare tire, however. ESC and other functions may have reduced performance.

4.4.2 Replacement Tires

Tire size is important for proper performance. Replacement tires should be the same size, load range, and construction as the original tires. Replace tires in axle sets or complete sets. Use of any other tire size or type may seriously affect operation and controlled brake system performance.

DO NOT DISTRIBUTE OR COPY WITHOUT BWI GROUP APPROVAL

4.5 Drivetrain Considerations

The EHCU is compatible with FWD, RWD, AWD, or 4WD drivetrain configurations. Excessive drivetrain / wheel / tire inertia and drivetrain drag can affect the ability of the EHCU to control wheel slip. AWD or 4WD drivetrains may require that the transfer case or other torque transfer / control system be decoupled during controlled brake operation to allow independent wheel control.

4.6 Wiring Considerations

The EHCU includes many input / output signals, as well as battery and ignition feeds. The vehicle wiring harness(es) containing these wires should be designed to minimize the chance of wires being cut, chafed, or connections becoming corroded, as these wiring harness failures will affect the EHCU and system performance. Wiring should be routed away from direct heat sources and protected from EMI through shielding or twisted wiring as recommended in the ECU Electrical Interface Document referenced in 11.2 *BWI Group Documents.*

5 Vehicle Assembly Plant Considerations

5.1 EHCU Processing Overview

The EHCU is shipped for OEM use as a completely dry unit containing no brake fluid. Electrical hookup to the EHCU is required to be used to remove air from the EHCU pump circuits. Electrical hookup, during the recommended Evacuation & Fill process, electrically cycles the release and prime valves and activates the pump motor using device control commands.

5.2 Brake Fluid Considerations

The EHCU is compatible only with DOT3, DOT4, and DOT5.1 type brake fluids, with water content not to exceed 10%. These fluids and the associated brake components are not compatible with any mineral-based oils. All vehicle assembly plant fluid handling systems and procedures should consider appropriate methods to sufficiently isolate any stored or processed brake fluid from exposure to its surrounding atmosphere and from other automotive fluids, lubricants and components, particularly those which have mineral-based oils present.

Brake fluid is very hygroscopic, meaning it can absorb large quantities of water from its surrounding environment. Brake fluid is typically manufactured to initially contain less than one half of one percent (< ½ %) water content by volume, but can absorb up to 10% water content over its life within a vehicle brake system. Water content can dramatically affect brake system performance due to its impact on fluid viscosity and boiling point. It is strongly recommended that conditioned (degassed / de-aerated) brake fluid be utilized for the Fluid Fill process, as it will better absorb the trace amounts of air remaining in the brake system following the Evacuation and Fill process. Circulating brake fluid under a sustained vacuum within a closed reservoir will provide the dual benefit of removing both air and moisture from the fluid prior to dispensing it into the brake system during Fluid Fill.

5.3 Brake System Leak Testing

Brake system leak testing can be conducted before, during or after the brake system has been filled with brake fluid. Some approved leak checking methods are Low Air Pressure, Vacuum Decay, or Brake Pressure testing. Regardless of the test method used, it is important to allow the brake system to stabilize. All brake components need to be in a “ready to test state” with no chance of caliper, or wheel cylinder movement in order to reduce the effects on the test results.

5.4 Evacuation, Fluid Fill and EHCU Electrical Hookup Process

This section will address the recommended evacuation, fluid fill, and EHCU electrical hookup processes at the vehicle assembly line.

5.4.1 General Process Recommendations for Evacuation and Fluid Fill

The recommended process for the Evacuate and Fluid Fill process are as follows:

Vacuum Pump Capability	0.5–1.0 torr (mm Hg)

DO NOT DISTRIBUTE OR COPY WITHOUT BWI GROUP APPROVAL

Evacuation Process Time	Dependent on Evacuation equipment and brake system volume. Include electrical hookup release and prime valve and pump run sequence for EHCU (5 sec minimum, 10 second maximum)
Leak Check*	Optional (air test prior to Evacuation / electrical hookup sequence or vacuum decay test during Evacuation)
Fluid Type	Dried and degassed DOT3, DOT4, or DOT 5.1 brake fluid only.
Fluid Fill Pressure	≥ 4 bar, net (max pressure limited by master-cylinder reservoir capability)
Fluid Fill Time	Dependent on Fill equipment and brake system volume. Include electrical hookup release valve sequence for EHCU (5 second minimum, 10 second maximum), or optional 30% duty cycle.
Pressure Stabilize* (leak check)	Optional
Reservoir Scavenge & Top-Off	Include electrical hookup pump run sequence for EHCU (2 second minimum, 10 second maximum).
Total Process Time:	Dependent on Evacuation & Fill Equipment capability, brake system volume, and operator setup activities. Total process time with EHCU activated is recommended to be ≤120 seconds.

*denotes optional process steps

5.4.2 Recommended Evacuate & Fluid Fill Process Flow

Step	Processing Unit	Operator
RE&F_1 (Optional)	Air pressure decay test, limited to maximum pressure capability of the master cylinder reservoir	Connect air pressure test head to the master cylinder reservoir. Activate the processing unit to pressurize brake system. Await pressure decay test completion. Disconnect air pressure test head.
RE&F_2	Vacuum pump runs continuously. Vacuum level measured at the 'head' should be maintained at 0.5-1.0 torr (mm Hg)	Connect the processing unit to the master cylinder reservoir. Make electrical connection to the EHCU. Switch power on to the EHCU.
RE&F_3	Begin Evacuation cycle. After vacuum stabilizes at <5 mbar (<3.75mm Hg), turn on all EHCU release and prime valves and the EHCU pump motor for 5 seconds minimum (10 seconds maximum), and then turn off all EHCU release and prime valves and the EHCU pump motor.	Activate the processing unit to begin the Evacuation process on the brake system and perform the EHCU release and prime valve and pump run sequence.
RE&F_4 (Optional)	Vacuum decay leak test.	Activate the processing unit to begin the vacuum decay test.
RE&F_5	Begin fluid fill cycle with DOT3, DOT4, or DOT 5.1 brake fluid only. Minimum Fill pressure ≥ 4 bar. The maximum fill pressure is limited by the pressure capability of the master cylinder reservoir. Turn on all EHCU release and prime valves for 5 seconds minimum (10 seconds maximum), and then turn off all EHCU release valves.	Activate the processing unit to begin the fill cycle and perform the EHCU release and prime valve sequence.
RE&F_6 (Optional)	Hydraulic leak pressure decay test	Activate the processing unit to begin the fill cycle.
RE&F_7	Begin the Scavenge sequence to remove excess fluid from the master cylinder reservoir. Turn on the EHCU pump motor for 2 seconds minimum (10 seconds maximum), and then turn off the EHCU pump motor.	Activate the processing unit to begin the scavenge sequence and the EHCU pump run sequence.
RE&F_8	Processing unit should record a pass/fail result for the brake system, and signal the operator when process is complete. End of Evacuate & Fluid Fill Process	Disconnect the processing unit from the master cylinder reservoir. Switch power off to the EHCU and disconnect electrical connector.

DO NOT DISTRIBUTE OR COPY WITHOUT BWI GROUP APPROVAL

Figure 5.4.2
BWI DBC1200 Evac and Fill Sequence

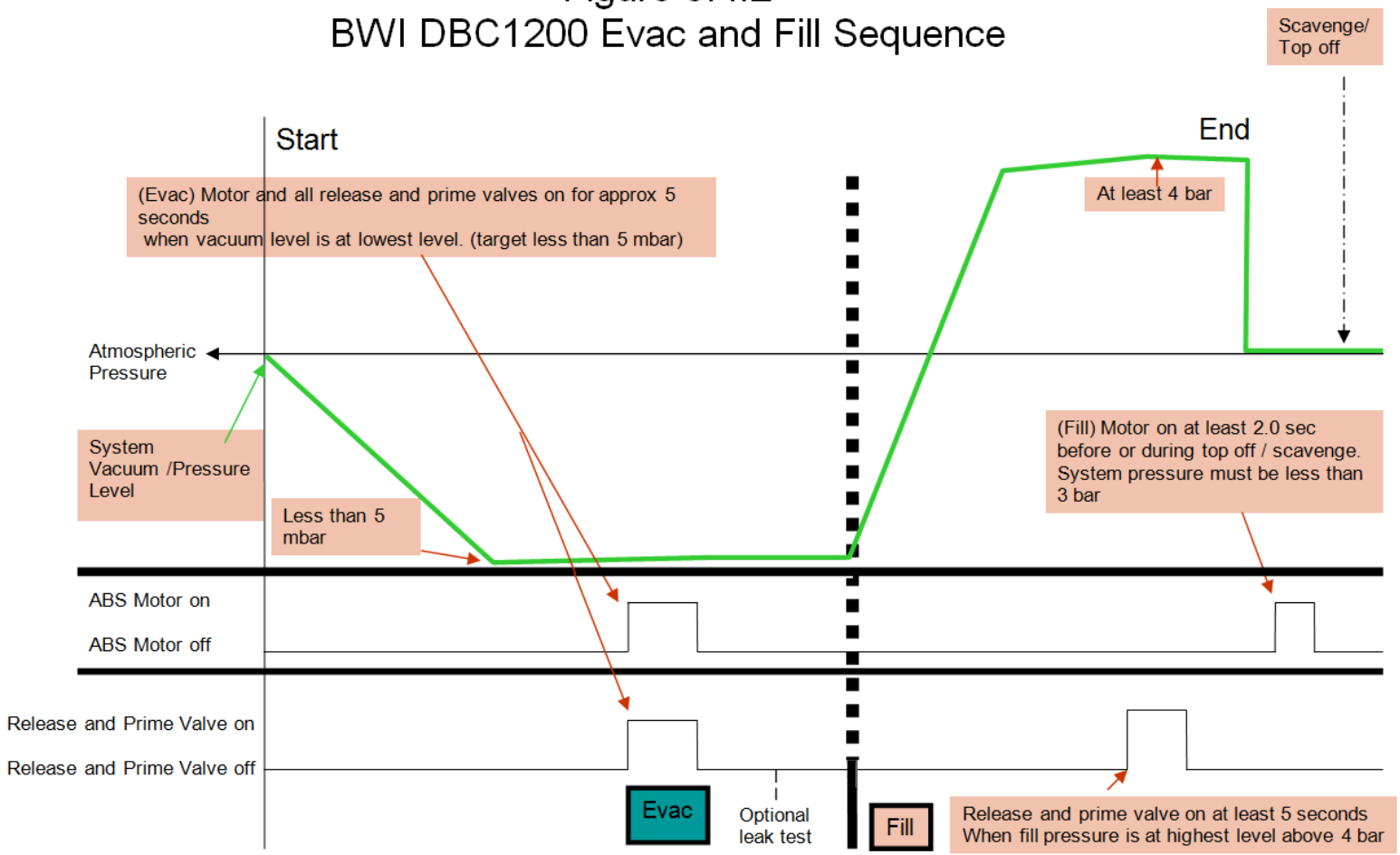

DO NOT DISTRIBUTE OR COPY WITHOUT BWI GROUP APPROVAL

5.4.3 Optional Evacuate & Fluid Fill Process Flow

Step	Processing Unit	Operator
OE&F_1 (Optional)	Air pressure decay test, limited to maximum pressure capability of the master cylinder reservoir	Connect air pressure test head to the master cylinder reservoir. Activate the processing unit to pressurize brake system. Await pressure decay test completion. Disconnect air pressure test head.
OE&F_2	Vacuum pump runs continuously. Vacuum level measured at the 'head' should be maintained at 0.5-1.0 torr (mm Hg).	Connect the processing unit to the master cylinder reservoir. Make electrical connection to the EHCU. Switch power on to the EHCU.
OE&F_3	Begin Evacuation cycle. After vacuum reaches <5 mbar (<3.75mm Hg), turn on all EHCU release and prime valves and the EHCU pump motor. These will remain on for the entire duration of Evac & Fill after this point. Message must be sent every 3-5 seconds for the ECU to remain in device control mode.	Activate the processing unit to begin the Evacuation process on the brake system and begin the EHCU release and prime valve and pump run sequence.
OE&F_4 (Optional)	Vacuum decay leak test. Continue sending EHCU release and prime valve "on" and EHCU pump motor "on" commands every 3-5 seconds.	Activate the processing unit to begin the vacuum decay test.
OE&F_5	Begin fluid fill cycle with DOT3, DOT4, or DOT 5.1 brake fluid only. Minimum Fill pressure $\geq$ 4 bar. The maximum fill pressure is limited by the pressure capability of the master cylinder reservoir. Continue sending EHCU release and prime valve "on" and EHCU pump motor "on" commands every 3-5 seconds.	Activate the processing unit to begin the fill cycle.
OE&F_6 (Optional)	Hydraulic leak pressure decay test. Continue sending EHCU release and prime valve "on" and EHCU pump motor "on" commands every 3-5 seconds.	Activate the processing unit to begin the pressure decay test.
OE&F_7	Begin the Scavenge sequence to remove excess fluid from the master cylinder reservoir. Continue sending EHCU release and prime valve "on" and EHCU pump motor "on" commands every 3-5 seconds. EHCU release and prime valves and EHCU pump can be commanded "off" (or message to be "on" no longer sent) a minimum of 2 seconds after system pressure falls below 3 bar.	Activate the processing unit to begin the scavenge sequence.
OE&F_8	Processing unit should record a pass/fail result for the brake system, and signal the operator when process is complete. End of Evacuate & Fluid Fill Process	Disconnect the processing unit from the master cylinder reservoir. Switch power off to the EHCU and disconnect EHCU electrical connector.

DO NOT DISTRIBUTE OR COPY WITHOUT BWI GROUP APPROVAL

Figure 5.4.3
Optional BWI DBC 1200 Evac and Fill Sequence
(30% duty cycle cal option only)

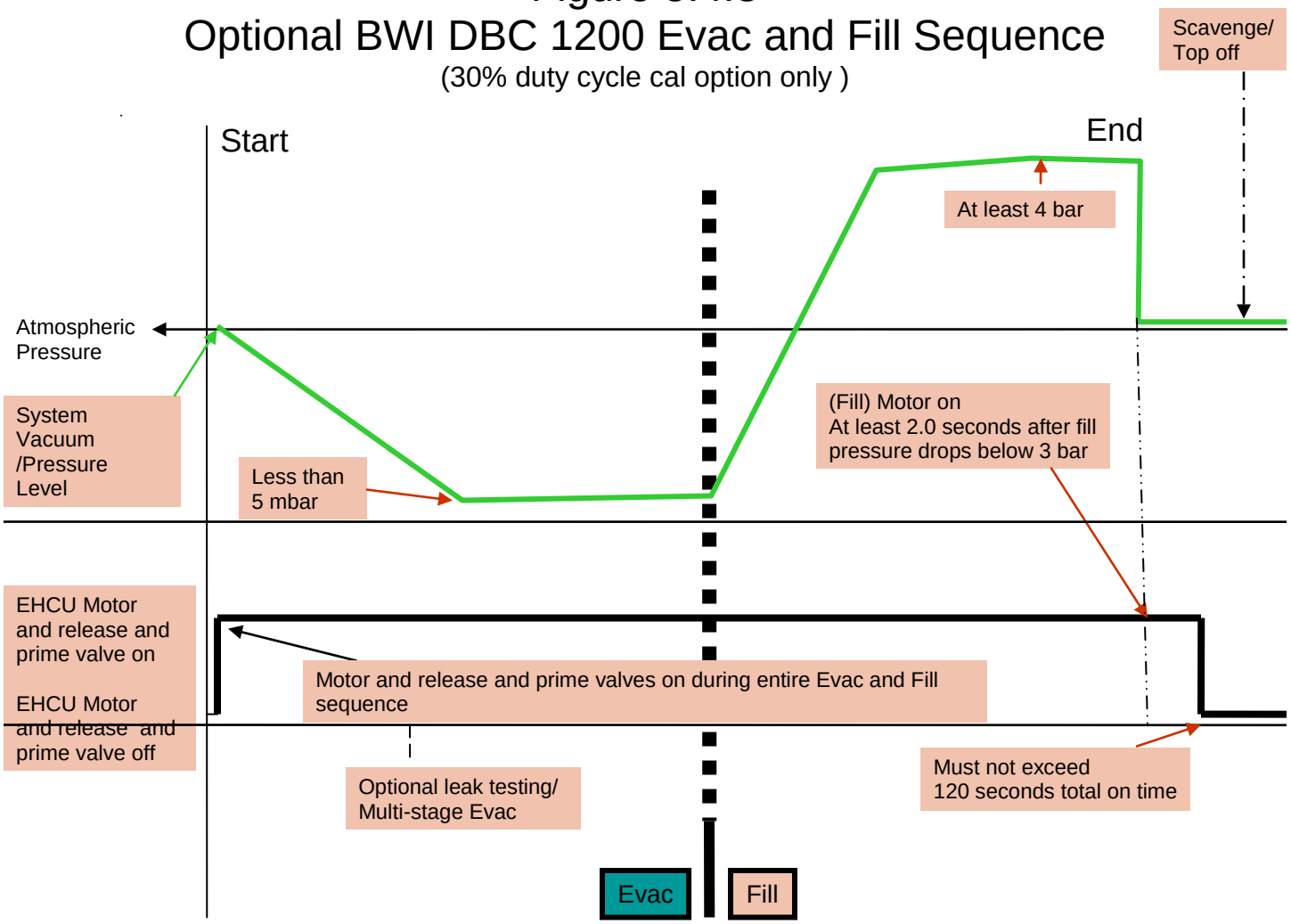

5.4.4 Improper Evacuate & Fill Processing

If the Evacuation and Fill sequence is not successfully completed, the vehicle brake system will require a repair bleed procedure. Refer to 5.7 *Repair Bleed Process.*

5.5 EOL Testing / Vehicle Assembly Verification

This section explains the End-of-Line (EOL) test which is part of the final vehicle inspection that assures proper operation of the foundation brake system with the installed EHCU. The EOL facility ensures that the EHCU is properly connected both electrically and hydraulically to the vehicle by verifying the issued serial control command generates the appropriate brake system response.

EOL testing requires a serial data diagnostic (scan/service) tool and the use of a four-wheel roll machine (vehicle dynamometer), or its equivalent. A separate specification governs the serial data communication protocol for the ECU which outlines the proper addressing (access) methods for diagnostic & device control modes. Normal functionality is disabled and the warning lamps may be illuminated (depending on application-specific lamp control method and calibrations) while in device control mode. The EOL tests can be executed in two phases - a static test during which the vehicle remains stationary and does not require the roll machine; and a dynamic test which utilizes the roll machine to evaluate brake system responses to specific control commands.

DO NOT DISTRIBUTE OR COPY WITHOUT BWI GROUP APPROVAL

5.5.1 EOL Facility Recommendations

The following facilities and items are to be provided by the customer:

- Roll machine(s) capable of detecting a brake pressure apply and release sequence in a specific order (Example LR, RR, LF, RF).
- EOL test tools to support control & communication with the EHCU
- Serial communication interface tool – scan/service test tool
- Control of the vehicle testing sequence
- Coordinated control of the roll machine with the vehicle
- Dynamic measurement of brake force (reaction torque on rolls)
- Evaluation & report-out of the generated data

5.5.2 EOL Test Flow

Step	Description
EOL_1	**Start of Test** preparation, drive vehicle into test bay, connect Test Tool to vehicle Serial Data Link
EOL_2	Verify ABS ID (part number) to ensure installation of correct EHCU.
EOL_3	Clear stored Diagnostic Trouble Codes (DTCs)
EOL_4	Verify Brake Switch Input
EOL_6	Verify Wheel Speed Sensor Output for vehicle at rest
EOL_7	Verify operation of Warning Lamps
EOL_8	End of Static Test / Verify NO DTCs stored
EOL_9	Start of Dynamic Test
EOL_10	Verify Wheel Speed Sensor Input signal is correct
EOL_11	Verify operation of base brake system
EOL_13	Verify operation & correlation of hold & release solenoid valves, confirm brake pipe routing and proper wheel speed sensor wiring connections
EOL_14	Perform Vacuum Relief
EOL_15	Verify NO DTCs are stored, if DTCs are present, repair issue and then clear codes
EOL_16	**End** of the 'End-of-Line' test sequence

5.5.3 Start of EOL Test

Following car start, the vehicle will complete an initialization check as described in the Initialization / Self-Test section of 2.3.3 *Standard Content*. If no functional warning lamps are displayed to the driver, proceed to drive the vehicle onto the EOL facility. Otherwise, connect the scan/service tool to diagnose and repair the reported fault.

Step	Descriptions	Values	Yes	No
1	Drive vehicle onto the roll machine.		Go to Step 2	
2	Connect Test Tool to Diagnostic Connector (ALDL). Does Test Tool communicate to DBC 1200 ECU?		Go to Step 4	Go to Step 3
3	Communication problem. Correct problem.		Go to Step 1	

5.5.4 Verify EHCU ID

<u>Measurement/Recorded Data</u>

- EHCU identifier

Step	Descriptions	Values	Yes	No
4	Read EHCU ID using test tool. Is ID correct?	*part number*	Go to Step 6	Go to Step 5
5	Incorrect EHCU assembly. Replace unit.		Go to Step 1	

<u>Remark</u>

This will confirm that the configuration of the intended DBC 1200 system matches the desired option content of the vehicle build log.

DO NOT DISTRIBUTE OR COPY WITHOUT BWI GROUP APPROVAL

5.5.5 Clear Diagnostic Trouble Codes (DTCs)

Step	Descriptions	Values	Yes	No
6	Using test tool, clear all stored DTCs.		Go to Step 7	

Remark

During the assembly process of the vehicle, if the vehicle is powered up without all electrical connectors mated to the EHCU, various DTCs could be set. Those DTCs need to be cleared before testing can begin.

5.5.6 Verify Brake Switch Input

Measurement/Recorded Data

- Brake Switch Input signal

Step	Descriptions	Values	Yes	No
7	Apply brake and hold. Does test tool indicate brake switch is "ON"?	ON	Go to Step 8	Go to Step 9
8	Release brake pedal. Does test tool report "OFF"?	OFF	Go to Step 10	Go to Step 9
9	Inoperable brake switch, or wiring/circuit problem. Correct problem.		Go to Step 1	

5.5.7 Verify Wheel Sensor Input while at Rest

Measurement/Recorded Data

- Wheel Speed Sensor Input signals

Step	Descriptions	Values	Yes	No
15	Verify all of the wheels are at rest and read wheel sensor input using test tool. Are values for all sensors correct as specified?	0 kph	Go to Step 17	Go to Step 16
16	Wheel Speed Sensor, or circuit problem. Correct problem.		Go to Step 1	

5.5.8 Verify Operation of Warning Lamps

Measurement/Recorded Data

- Lamp Driver Output
- Lamp ON/OFF Input

Step	Descriptions	Values	Yes	No
17	Using test tool, command all DBC 1200-related Warning Lamps to come ON, and then OFF. Are all lamps at instrument panel controlled ON and OFF as commanded?	ON/OFF	Go to Step 18	Go to Step 20
20	Lamp inoperative, Lamp Driver module inoperative or wiring circuit problem. Correct problem.		Go to Step 1	

List of Typical Warning Lamps

- ABS Warning Lamp
- Brake Warning Lamp
- TCS Warning Lamp
- ESC Warning Lamp

5.5.9 End of Static Test

Measurement/Recorded Data

- Diagnostic Trouble Codes (DTCs)

Step	Descriptions	Values	Yes	No
21	Read stored DTC(s) using test tool. Are any DTCs stored within the DBC 1200 ECU?		Go to Step 22	Go to Step 23
22	DTC diagnosis is required. Correct problem.		Go to Step 1	

DO NOT DISTRIBUTE OR COPY WITHOUT BWI GROUP APPROVAL

5.5.10 Start of Dynamic Test

Step	Descriptions	Values	Yes	No
23	Apply brake with engine still running (no throttle input) to ensure stationary vehicle prior to start of dynamic vehicle test.		Go to Step 24	

5.5.11 Verify Wheel Speed Sensor Input

Measurement/Recorded Data

- Wheel Speed Sensor Input

Step	Descriptions	Values	Yes	No
24	Accelerate vehicle to dynamic test speed. Read wheel speeds using test tool. Are all wheel speeds within specified values?	<+/-4% variation from true speed	Go to Step 26	Go to Step 25
25	Wheel speed sensors or circuits have a problem. Correct problem with wheel speed difference.		Go to Step 1	

Remark

After the vehicle speed reaches the maximum test speed (the maximum vehicle test speed is determined by the vehicle assembly plant personnel), all rollers should be de-coupled from each other.

5.5.12 Verify Operation of the Base Brake System

Measurement/Recorded Data

- Resistance/Reactive Forces (torque) from dynamometer

Step	Descriptions	Values	Yes	No
26	Using existing brake test procedure, verify: • Brake Drag • Brake Force • Brake Balance Are values acceptable?		Go to Step 28	Go to Step 27
27	Potential base brake hardware issue, or measurement problem with EOL facility. Correct problem.		Go to Step 1	

5.5.13 Verify & Correlate Operation of Solenoid, Brake Pipe Routing and Wheel Sensor Wiring

Measurement/Recorded Data

- Wheel Sensor Input
- Resistance/Reactive Forces (torque) from dynamometer
- Hold Valve and Release Valve Status (ON/OFF, location)
- Pump Motor Status (ON/OFF, location)
- Hold Valve and Release Valve Command Output
- Pump Motor Command Output

Step	Descriptions	Values	Yes	No
28	After vehicle is accelerated, decouple all rollers. Apply brake and maintain with a steady force. Using test tool, energize LR Hold solenoid valve (ON - closed), the LR Release solenoid valve (ON - open), and activate the Pump Motor (ON). Did LR brake force decrease?	LR brake force should increase, then decrease (should stop decelerating).	Go to Step 29	Go to Step 33
29	De-energize the LR Release valve (OFF - closed) and keep the LR Hold valve energized (ON - closed) with the Pump Motor ON. Does the brake force and wheel speed remain steady for the LR wheel?	LR wheel speed should be stable.	Go to Step 30	Go to Step 33
30	With LR Release valve de-energized (OFF - closed), de-energize LF Hold valve (OFF - open) with Pump Motor ON. Does the brake force increase and the	LR wheel speed should decrease and	Go to Step 31	Go to Step 33

DO NOT DISTRIBUTE OR COPY WITHOUT BWI GROUP APPROVAL

	wheel speed decrease on LR wheel?	the brake force increase.		
31	While maintaining vehicle speed, repeat steps 28 through 30 for the RR, LF and then RF wheels during the same drive/speed cycle. Do all wheels pass this test?		Go to Step 32	Go to Step 33
32	Turn pump motor off 5 seconds after all wheels are complete and all valves are turned off. Valve sequence should take less than 5 seconds for all 4 wheels, and total sequence time should be less than 10 seconds.		Go to Step 34	
33	System diagnosis is required. Correct problem.		Go to Step 1	

5.5.14 Perform Vacuum Relief Profile

Measurement/Recorded Data

- Prime Solenoid Status (ON/OFF)
- Brake Switch Status
- Prime Valve Command Output

Step	Descriptions	Values	Yes	No
34	With foot removed from brake, execute Vacuum Relief by actuating both normally-closed Prime valves (ON - open) for 2 seconds with the Pump Motor OFF. Verify brake switch input is not active (OFF) prior to actuation.	Brake switch OFF	Go to Step 35	

Remark

Anytime the pump motor on the DBC 1200 EHCU is energized (ON) during device control, the prime valve should be briefly energized (ON) afterward with no brake system pressure to relieve residual vacuum at the pump inlet.

5.5.15 Verify DTC Status

Measurement/Recorded Data

- Diagnostic Trouble Codes (DTCs)

Step	Descriptions	Values	Yes	No
35	Retrieve DTC from ECU using test tool. Any reported, or stored DTCs?		Go to Step 36	Go to Step 37
36	Correct problem.		Go to Step 1	

5.5.16 End of Test

Step	Descriptions	Values	Yes	No
37	Clear all DTCs once, and exit EOL test sequence.		End of Test	

5.6 Alternate EOL Process

Where the vehicle assembly plant does not utilize a four-wheel roll machine, a single-axle roll machine with the ability to decouple the left and right wheels on the same axle can provide a reduced evaluation with sufficient verification of correct brake system assembly and function. Although the more thorough four-wheel process is preferred, the two wheel (single axle at a time) process method can reveal gross assembly faults.

5.6.1 Single-Axle EOL Assumptions

The following requirements are established for the evaluation of a brake system. It is assumed that the single-axle test is typically performed at lower vehicle (wheel) speeds of approximately 5 kph.

- The dynamometer rolls are self-powered and can drive the wheels of the test vehicle
- The roll drums contain load cells capable of measuring reactive torque (force), and rotational speed
- The drums can be decoupled side-to-side (left can rotate independently of the right roller)
- A facility is available to execute device control and check for DTCs within the DBC 1200 ECU

DO NOT DISTRIBUTE OR COPY WITHOUT BWI GROUP APPROVAL

5.6.2 Alternate EOL Process Flow

Step	Description
A-EOL_1	**Start of Test** preparation, drive front wheels onto roll, connect to Serial Data Link
A-EOL_2	Verify DBC ECU ID (part number) to ensure installation of correct DBC unit
A-EOL_3	Clear stored Diagnostic Trouble Codes (DTCs)
A-EOL_4	Verify Brake Switch Input
A-EOL_6	Verify wheel speed sensor output for vehicle at rest
A-EOL_7	Verify operation of all warning lamps
A-EOL_8	End of Static Test / verify NO DTCs stored – repair condition if DTCs are present, clear codes
A-EOL_9	Start of Dynamic Test – drive roll to spin front wheels to target speed, then decouple rolls side-to-side
A-EOL_10	Energize (ON – close) the LF Hold valve and have driver apply brakes. Verify LF wheel speed remains steady, but RF wheel speed decreases. Have driver release brakes.
A-EOL_11	Energize (ON – close) the RF Hold valve and have driver apply brakes. Verify RF wheel speed remains steady, but LF wheel speed decreases. Have driver release brakes
A-EOL_12	End of front axle test. Drive the vehicle forward to engage rear wheels with roll.
A-EOL_13	Repeat steps A-EOL_9 through A-EOL_10 with the rear axle: LR corner, then RR corner
A-EOL_14	Perform Vacuum Relief profile
A-EOL_15	Verify NO DTCs are stored – repair condition if DTCs are present, clear codes
A-EOL_16	**End** of the 'Alternate End-of-Line' test sequence

5.7 Repair Bleed Process

The brake system repair bleed process will be identical for in-plant use and for field service repair needs. Total bleed time is determined based upon fluid supply pressure and the brake system volume and configuration. The bleed of the EHCU, as installed in the brake system, is facilitated by a service or scan tool, and suitable hand tools as guided by the Service Manual CTD and Communications CTD's referenced in section 11.2 *BWI Group Documents.*

5.8 Assembly Adjustment / Tuning

No adjustment or tuning of the EHCU is required at the vehicle installation/assembly level.

5.9 Shelf Life

Prior to installation on the vehicle, the EHCU as prepared for OEM use is intended for use within six (6) months from its original date of production. The EHCU must be maintained in its original shipping state consisting of port tape or similar covering installed on the hydraulic unit, and remain as packaged in the production dunnage with outer wrap and applied desiccant until actual use. The date of manufacture for the EHCU will be indicated on the shipping package, as well as inscribed on each individual EHCU assembly.

6 EHCU Service and Repair

The EHCU shall be serviced by replacement of a complete EHCU, or a separate HCU and/or ECU, as defined and contracted for the specific application. Refer to the Service Manual CTD specified in section 11.2 *BWI Group Documents* for additional information.

7 EHCU Environmental Capabilities

The EHCU is designed to withstand the following environmental conditions. Specific product performance will be documented in the application-specific EHCU Validation Summary.

7.1 Temperature and Humidity

7.1.1 Operating

The EHCU is designed to operate within the following temperature and humidity ranges:

- Normal Operation $-20\ C \leq T \leq 105\ C$
- Excursions (reduced performance or time restrictions) $-40\ C \leq T < -20\ C$

DO NOT DISTRIBUTE OR COPY WITHOUT BWI GROUP APPROVAL

105 C < T ≤ 125 C

- Relative Humidity 5 % to 95 %

7.1.2 Shipping

The EHCU is designed to withstand the following temperature and humidity ranges during shipping:

- Temperature -40 C ≤ T ≤ 65 C
- Relative Humidity 5 % to 95 %

7.2 Thermal Shock

The EHCU is designed to withstand exposure to temperature changes (air or air-to-water) typical of Automotive underhood chassis or body-mounted applications.

7.3 Atmospheric Pressure

The EHCU is designed for the following atmospheric pressure range:

- Atmospheric pressure - operating 0.50 to 1.05 bar
- Atmospheric pressure - shipping 0.25 to 1.20 bar

7.4 High Pressure Spray

The EHCU is designed to withstand exposure to a water jet spray / pressure washer typical of those encountered in a self-operated car wash.

7.5 Corrosion

The EHCU is designed to withstand exposure to an accelerated 10 year, corrosive environment.

7.6 Chemical Resistance

The EHCU is designed to withstand exposure to chemicals typical of automotive underhood chassis or body-mounted applications.

7.7 Vibration

The EHCU is designed to withstand vibration and shock loading typical of automotive underhood chassis or body-mounted applications.

7.8 Impact/Drop

The EHCU is designed to have no loss of function when visible damage is not recognized after a single one-meter drop, with any orientation, onto a concrete surface. It is recommended to scrap any EHCU that is dropped and to not install it on a vehicle.

7.9 Shipping & Handling

The EHCU, when packaged as intended for shipping, will withstand the temperature and humidity extremes of section 7.1.2 *Shipping*, the atmospheric pressure extremes of section 7.3 *Atmospheric Pressure*, and shipping vibration stresses per ASTM D4169-05 (truck), simulating all typical modes of transport to the contracted customer location.

7.10 Electrical Environment Compatibility

The EHCU is designed to withstand exposure to electrical environments typical of automotive underhood chassis or body-mounted applications, as well as the typical handling / assembly processes. Refer to the application-specific EHCU Validation Summary for specific product performance.

8 EHCU Performance

8.1 Minimum Release Pressure

Minimum release of brake pressure from 190 bar at all 4 wheel brakes -0.25 bar ≤ P ≤ 2.8 bar

8.2 Leakage

At 23 C brake fluid temperature:

- Total EHCU leakage during a 3 min period, with

DO NOT DISTRIBUTE OR COPY WITHOUT BWI GROUP APPROVAL

solenoid valves deactivated, at a ΔP of 120 bar ≤ 0.25 cm^3 / min

8.3 Operating Voltage

The following describes the operating voltage range at the EHCU vehicle connector terminals

- Full performance per specification $9.5 \leq V \leq 16.0$
- With hydraulic operational restrictions, DRP functional $8.0 \leq V < 9.4$
- No hydraulic operation, DRP non-functional $6.0 \leq V < 8.0$
- With time and temperature restrictions $16 < V \leq 18.7$

8.4 Operating Pressure – Nominal Voltage Condition

The maximum operating pressure at which full functionality is defined, at a nominal voltage of 12.0V supplied to the ECU, is defined below for each function:

Function	Maximum Master Cylinder Operating Pressure (bar)
ABS/DRP	200 bar
PB Functions	180 bar

8.5 Operating Pressure – Low Voltage Condition

The maximum operating pressure at which full functionality is defined, at a reduced voltage of 9.5V supplied to the ECU, is defined below for each function:

Function	Maximum Master Cylinder Operating Pressure (bar)
ABS/DRP	160 bar
PB Functions	150 bar

8.6 Pump Flow

At 23 C brake fluid temperature, and 12V at the motor terminals (or 12.8V at the ECU terminals):

- Pressure Build flow (0-50 bar) ≥ 4.2 cm^3 / sec (6.4 with the optional motor)
- Pressure Modulation flow (180 bar) ≥ 2.9 cm^3 / sec (4.0 with the optional motor)

9 ABS System Failure

9.1 DFMEA Process

Inputs from the EHCU, HCU, and ECU DFMEAs are used to determine and document ABS system failure modes and to determine appropriate fail action.

9.2 EHCU Failure

The vehicle should be designed such that, in the event of an EHCU electrical or hydraulic failure, the vehicle will meet the failed ABS and/or failed proportioning requirements of the applicable Government Brake Regulation(s).

9.3 Self Diagnostics

The ECU includes circuitry to diagnose faults within the ABS system. These diagnostics include open circuits, shorts to ground and shorts to battery. The internal diagnostics include the following circuits:

DO NOT DISTRIBUTE OR COPY WITHOUT BWI GROUP APPROVAL

- Battery Power
- Relay Circuits
- Solenoid Circuits
- Pump Motor Circuit
- Wheel Speed Sensor Circuits
- Brake Switch

Note that the EHCU is capable of diagnosing failures internal to the EHCU as well as failures related to the overall ABS System which includes the vehicle harness and various sensors and switches. Therefore, an ABS or Red Brake Telltale being displayed does not necessarily mean that there is a fault within the EHCU itself, and that the EHCU needs replacement. It simply means that a diagnostic code is set, even if the failure is outside of the EHCU, and that the performance of the ABS or Base Brake system may be affected. Refer to the Service Manual CTD specified in 11.2 *BWI Group Documents* for additional information.

Details on the diagnostic codes that are implemented for a particular application will be included in the Service Manual CTD supplement.

9.4 Failsafe Design

The ECU includes independent circuitry that monitors the microprocessor for proper operation. The monitoring function is independent of control algorithm and diagnostic software. In the event of a detected fault, the monitoring circuitry disables the actuator outputs through its redundant control. If a reset of the microprocessor is needed, the ABS warning lamp output is activated by default. All functions external to the microprocessor are verified to be operating properly through diagnostic software and hardware. It is recommended that any warning lamps related to the EHCU use a default-on strategy for cases when the EHCU is offline.

9.5 Partial System Shut Down

The EHCU is designed to isolate faults within a particular sub-system.

9.6 Circuit Protection

All external ECU connections are protected from shorts to battery or ground with the exception of power and ground connections. The pump motor is activated when the ECU is subjected to an application of reverse battery.

9.7 Control During Failure Modes

The following are the potential control modes utilized when failure modes are detected by the diagnostic system, depending on the effects of the failure mode.

- **ABS Normal Operation** – ABS operates at full performance.
- **DRP/CBD Normal Operation** – DRP and CBD operate at full performance.
- **ABS Disabled** – ABS attempts no control (is disabled).
- **DRP/CBD Disabled** – DRP and CBD attempt no control (are disabled).
- **DRP/CBD Hold Only** - Modified DRP/CBD entrance with only pressure hold capabilities allowed while DRP/CBD is active. A lower than normal wheel pressure is maintained in order to avoid pressure releases.
- **DRP/CBD Minor Degradation** – DRP/CBD control information has been reduced by another failure within the system. Full DRP control will be attempted with the information that remains.
- **DRP/CBD Partial Function** – DRP/CBD control capability has been reduced by another system failure. Control information associated with that failure will be ignored, but full DRP control will be attempted with the information that remains, e.g. can result in full apply pressure delivered to the faulted/affected wheel/circuit.

10 Validation / Verification

10.1 Laboratory Validation Plan

The EHCU will be validated in a laboratory setting per the separately-provided EHCU Validation Summary.

DO NOT DISTRIBUTE OR COPY WITHOUT BWI GROUP APPROVAL

10.2 Vehicle Performance Verification

It is expected that the OEM will perform any required vehicle-level testing to verify vehicle dynamic performance to government regulations or OEM specifications.

11 Applicable Documents

11.1 Order of Precedence

In the event of a conflict between the text of this document and the specifications cited herein, this document shall take precedence. Nothing in this document shall be considered to supersede any applicable law or regulation unless a specific exemption has been obtained.
In the event of a conflict between the various documents and standards referenced herein, the following shall be considered the order of precedence:

- BWI Group Documents
- OEM Documents
- Industry Documents
- Other Documents

11.2 BWI Group Documents

- ECU Diagnostic Communication CTD for ISO 14229 – 18105034
- ECU Diagnostic Communication CTD for ISO 14230 / K-Line / Keyword 2000 - 18099903
- Diagnostic and Service Manual CTD for use on applications with active wheel speed sensors, K-line, and optional CAN – 18105383
- Service Manual CTD – 18086561
- Electrical Interface Specification - WQZA100
- Customer EHCU Outline Drawing (application-specific)
- ABS Electrical Mechanization Drawing (application-specific)
- Diagnostic Cross-Reference Table (application-specific)
- EHCU Validation Summary (application-specific)

12 References

The following is referred to within, or is considered to be supplemental information to, this customer technical document.

12.1 Industry Documents

- ASTM D4169-05: Standard Practice for Performance Testing of Shipping Containers and Systems
- ISO 7637-2: Road vehicles -- Electrical disturbances from conduction and coupling -- Part 2: Electrical transient conduction along supply lines only
- ISO 7637-3: Road vehicles -- Electrical disturbances from conduction and coupling -- Part 3: Electrical transient transmission by capacitive and inductive coupling via lines other than supply lines
- ISO 10605: Road vehicles -- Test methods for electrical disturbances from electrostatic discharge
- ISO 11452-2: Road vehicles -- Component test methods for electrical disturbances from narrowband radiated electromagnetic energy -- Part 2: Absorber-lined shielded enclosure
- ISO 11898: Road vehicles -- Controller area network (CAN)
- ISO 14229-1: Road vehicles -- Unified diagnostic services (UDS)
- ISO 14230-1: Road vehicles -- Diagnostic systems -- Keyword Protocol 2000 -- Part 1: Physical layer
- ISO 14230-2: Keyword Protocol 2000 Data Link Layer Recommended Practice (Ver 1.1)
- ISO 14230-3: Keyword Protocol 2000 Implementation of Diagnostic Services Recommended Practice
- ISO 16750: Road vehicles -- Environmental conditions and testing for electrical and electronic equipment

DO NOT DISTRIBUTE OR COPY WITHOUT BWI GROUP APPROVAL

- ISO 4038: Road vehicles - Hydraulic braking systems - Simple flare pipes, tapped holes, male fittings and hose end fittings
- JASO F402: Automotive parts - Flare fittings
- SAE/USCAR-2: Specification for Automotive Electrical Connector Systems
- SAE/USCAR-12: Design Guidelines for Automotive Electrical Connector Systems
- SAE/USCAR-25: Electrical Connector Assembly Ergonomic Design Criteria
- SAE J533: Flares for Tubing
- SAE J1290: Automotive Hydraulic Brake System--Metric Tube Connections

12.2 Acronyms, Abbreviations and Symbols

A	Ampere
ABS	Antilock Brake System
AWD	All Wheel Drive
C	Degree Celsius or Capacitance
CBD	Corner Braking Distribution
cm	Centimeter
CTD	Customer Technical Document
DOT	Department of Transportation
DBC	Delphi Brake Control
DFMEA	Design Failure Mode and Effects Analysis
DRP	Dynamic Rear Proportioning
DTC	Diagnostic Trouble Code
ECU	Electronic Control Unit
EH	Electro-Hydraulic
EHCU	Electro-Hydraulic Control Unit (HCU & ECU assembly)
EMC	Electromagnetic Compatibility
EOL	End of Line
ETS	Engine-Only Traction System or Enhanced Traction System
FWD	Front Wheel Drive
4WD	Four Wheel Drive
g	Acceleration of Gravity at Earth's Surface
GVM	Gross Vehicle Mass
H	Henry
HCU	Hydraulic Control Unit
Hz	Hertz
ISO	International Organization of Standards
JASO	Japanese Automotive Standards Organization
kg	Kilograms
L	Inductance
LF	Left Front (corner)
LR	Left Rear (corner)
m	Meter
max	Maximum
MC	Master Cylinder
mm	Millimeter
MP	Master Cylinder Primary
MS	Master Cylinder Secondary
ms	Millisecond
min	Minute or minimum
N/A	Not Applicable
OBD	On-Board Diagnostics

DO NOT DISTRIBUTE OR COPY WITHOUT BWI GROUP APPROVAL

OEM	Original Equipment Manufacturer
PB	Pressure-Build (i.e. TCS, ESC, PBA, etc. activation)
PM	Pressure-Modulation (i.e. ABS, DRP, or CDB activation)
R	Resistance or Rear or Regulation
RF	Right Front (corner)
RR	Right Rear (corner)
RWD	Rear-Wheel Drive
s	Second
SAE	Society of Automotive Engineers
T	Temperature or Time (T_x)
USCAR	United States Council for Automotive Research
V	Volt
Ω	Ohm

DO NOT DISTRIBUTE OR COPY WITHOUT BWI GROUP APPROVAL

13 RECORD OF CHANGES

Revision	Date	Authority	Description of Change
001	5/16/11	CR200000554	Released for production. Was suffix AC.
002	9/12/12	CR200001855	Added Pump Flow to EHCU Performance. Clarified mounting interface requirements. Corrected Figure 5.4.2, added DFMEA review recommendations. Was suffix DA.

DO NOT DISTRIBUTE OR COPY WITHOUT BWI GROUP APPROVAL